CHANGDA TONG
SCIENCE & TECHNOLOGY

$\mathcal{T}$-IPC

T-IPC-3517

Product manual

Tianjin Changdatong Technology Co., LTD

Founded in 2016, Tianjin Changdatong Technology Co., Ltd. is an innovative technology-based enterprise, integrating R&D, production, sales and service. The main products are programmable controllers, data acquisition modules, switches, industrial touch screens and big data platforms.

At present, the products have reached strategic cooperation with the world's top 500 enterprises and have been applied in many metallurgical enterprises. It is the first domestic enterprise to apply programmable controllers, data acquisition modules, switches, and industrial touch screens in the main process sections of metallurgy.

The company's vision and mission is to "become the backbone of the domestic independent industrial control product field".

Its market positioning is "to be a leading brand of completely independent domestic industrial control products, with the best cost-effective products".

catalogue

T-IPC-3517 Series controller

T-IPC-3517-D3 Controller Description 2

T-IPC3517-D3 Dimensional drawing 3

Ordering information 3

Select accessories 3

T-IPC-3517-D5Controller Description 4

T-IPC3517-D5 Dimensional drawing 5

Ordering information 5

Select accessories 5

T-IPC-3517-D10Introduction to Processors 6

T-IPC3517-D10 Size drawing 7

Ordering Information 7

Optional accessories 7

Controller T-IPC-3517-D3

- 3 x Gigabit network port
- 3 x USB3.1 port
- 1 x RS232, 1 x RS485
- 1 x miniPCIe expansion slot
- 1 x Custom LED lights
- HDMI and DP display
- DC 12-24V wide voltage input
- Wall-mounted or DIN-Rail rail mounted options are available
- Supports a wide temperature range of -20 ° C to 60 ° C

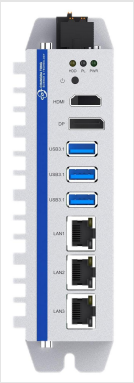

Technical specification

Product name		T-IPC-3517-D3
Hardware configuration	CPU	Intel® Celeron J6412, 2.0~2.6GHz, 4 cores /4 threads, 1.5MB L2 cache
	TDP	10W
	BIOS	AMI UEFI 256Mb
	Memory	1 x SO-DIMM DDR4-3200MHz (It supports up to 32GB)
	Storage	1 x M.2 2242
	USB	3 x USB3.1
	COM	1 x RS232, 1 x RS485
	Ethernet	3 x Intel Gigabit network port
	DP	Highest resolution4096 x 2160 @60Hz
	HDMI	Highest resolution3840 x 2160 @60Hz
	Extending the interface	1 x Full size miniPCIe Slot for card，With SIM card slot
	DO	1 x Custom LED lights
	Guard dog	1~255 level programmable setup
Operating system	Codesys	CODESYS V3.5 SP19 Patch 7
Power source	Input voltage	DC12-24V ±10%, Over-current, over-voltage and anti-reverse protection
	Power consumption	The maximum power consumption is 45W
Mechanical parameter	Structure	Sheet metal structure, fanless design, supporting wall-mounted or DIN-Rail rail installation
	Dimensions	(L)138mm x (W)102mm x (H)48mm
	Net weight	1.06Kg
Environment	Operating temperature	-20ºC ~ 60ºC (Using SSD)
	Storage temperature	-40ºC ~ 80ºC (Using SSD)
	Relative humidity	5~95% (Non condensing)
	vibration	Use SSD: 5~500Hz, 1.5Grms, following IEC60068-2-64
	impact	Use SSD: 20G(duration 11ms, half sine wave), following IEC60068-2-27
	EMC	CE/FCC Class B

Size (unit: mm)

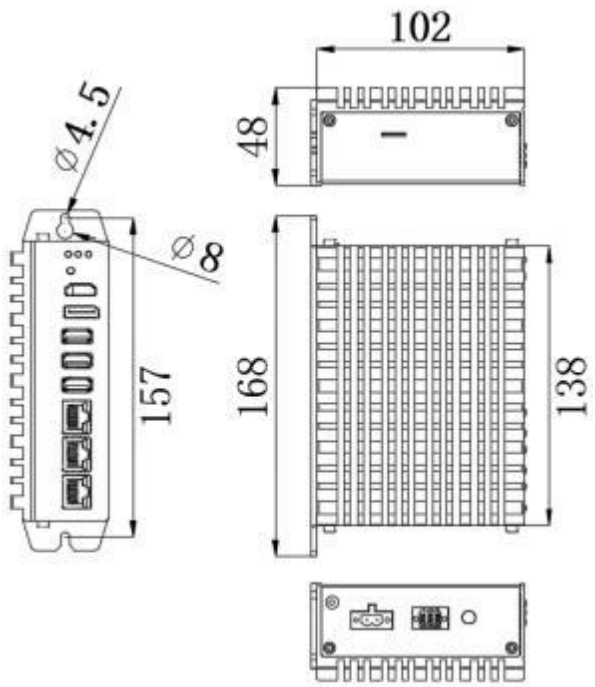

Interface

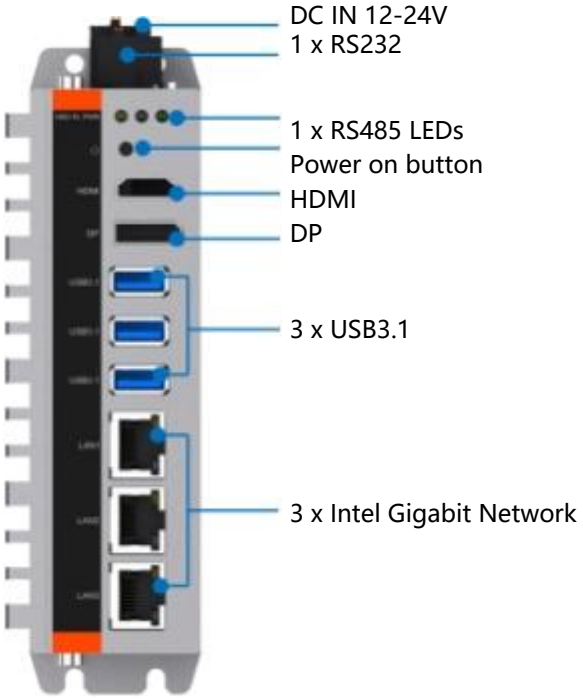

Ordering Information

Part number	Product name	Description
202405010001	T-IPC-3517-D3	CPU:J6412, Memory: none, M.2: none, 1 x RS232, 1 x RS485, 3 x LAN,3 x USB3.1, HDMI/DP Display, DC12-24V power input

Optional accessories

Accessories	Description
DDR4 Memory	DDR4-3200MHz: 4GB, 8GB, 16GB, 32GB
M.2 Solid state disk	64GB, 128GB, 256GB, 512GB, 1TB
Wifi Suite	mini PCIE: Intel 7260
3G/4GModules	mini PCIE: EC20, EG25, EC25
Installation method	DIN-Rail，Wall mounted type

Controller T-IPC-3517-D5

- 5 x Gigabit network port
- 3 x USB3.1 interface
- 1 x RS232, 1 x RS485
- 1 x miniPCIe expansion slots
- 1 x custom LED light
- HDMI and DP display
- DC 12-24V wide voltage input
- Optional wall-mounted or DIN-Rail installation
- Support -20 ~ 60℃ wide temperature working environment

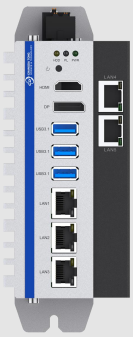

Technical Specifications

Product name		T-IPC-3517-D5
Hardware configuration	CPU	Intel® Celeron J6412, 2.0~2.6GHz, 4 cores /4 threads, 1.5MB L2 cache
	TDP	10W
	BIOS	AMI UEFI 256Mb
	Memory	1 x SO-DIMM DDR4-3200MHz (The maximum support is 32GB)
	Storage	1 x M.2 2242
	USB	3 x USB3.1
	COM	1 x RS232, 1 x RS485
	Ethernet	5 x Intel Gigabit network port
	DP	Maximum resolution4096 x 2160 @60Hz
	HDMI	Maximum resolution3840 x 2160 @60Hz
	Extending the interface	1 x Full size miniPCIe Card slot，With SIM card slot
	DO	1 x Custom LED lights
	Guard dog	1~255Level programmable setup
Operating system	Codesys	CODESYS V3.5 SP19 Patch 7
Power supply	Input voltage	DC12-24V ±10%, Over-current, over-voltage and anti-reverse protection
	Power consumption	The maximum power consumption is 45W
Mechanical parameters	Structure	Sheet metal structure, fanless design, supporting wall-mounted or DIN-Rail rail installation
	Dimensions	(L)138mm x (W)102mm x (H)48mm
	Net weight	1.06Kg
Environment	Operating temperature	-20ºC ~ 60ºC (Using SSD)
	Storage temperature	-40ºC ~ 80ºC (Using SSD)
	Relative humidity	5~95% (Non condensing)
	vibration	Using SSD：5~500Hz, 1.5Grms，Follow IEC60068-2-64
	impact	Use SSD: 20G(duration 11ms, half sine wave), following IEC60068-2-27
	EMC	CE/FCC Class B

Size (unit: mm)

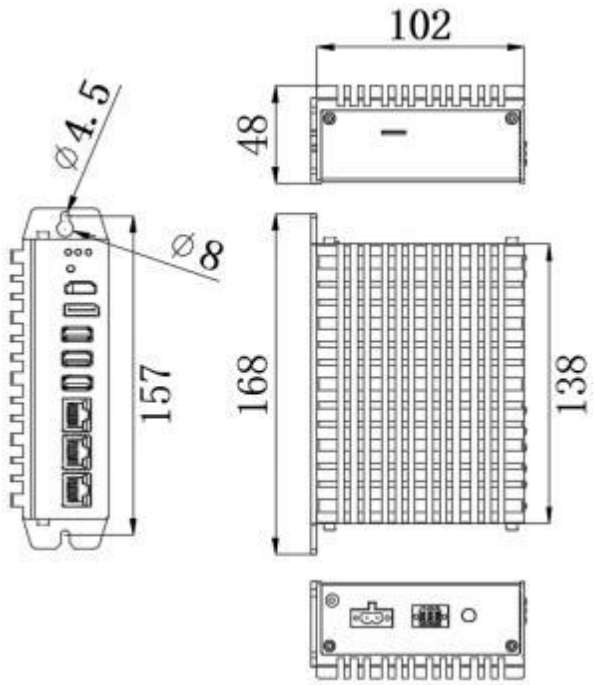

Interface

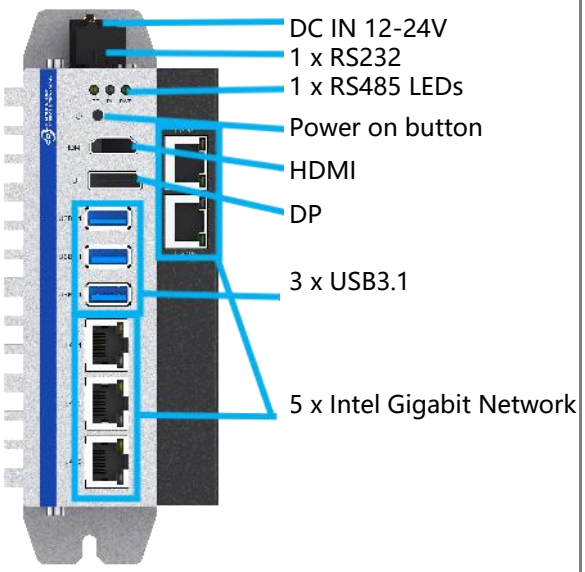

Ordering Information

Part number	Product name	Description
202405010001	T-IPC-3517-D5	CPU:J6412, Memory: none, M.2: none, 1 x RS232, 1 x RS485, 3 x LAN,3 x USB3.1, HDMI/DP display, DC12-24V power input

Optional accessories

Accessories	Description
DDR4 memory	DDR4-3200MHz: 4GB, 8GB, 16GB, 32GB
M.2 Solid State drives	64GB, 128GB, 256GB, 512GB, 1TB
Wifi kit	mini PCIE: Intel 7260
3G/4G modules	mini PCIE: EC20, EG25, EC25
Installation method	DIN-Rail，Wall mounted type

processor T-IPC-3517-D10

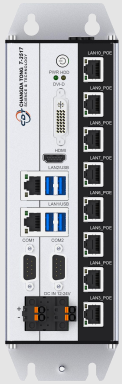

- Support Intel Core 6/7/8 generation i3/i5/i7, Pentium and Celeron LGA1151 interface high-performance desktop cpus
- 2 x Intel Gigabit network port
- 8 x Intel Gigabit PoE network port
- 4 x USB3.0 interface, built-in 1 USB port onboard for hardware dongle installation
- 2 x RS232/RS485, RS485 supports automatic flow control
- 1 x miniPCIe expansion slot, expandable Wifi, 3G/4G modules
- HDMI and DP dual display interface
- DC 12-24V wide voltage input
- Optional wall-mounted or DIN-Rail installation
- Support -20 ~ 60℃ wide temperature working environment

Technical specification

Product name		T-IPC-3517-D10
Hardware configuration	CPU	Intel Core 6/7/8代i3/i5/i7、Pentium and Celeron LGA1151Interface CPU
	TDP	Max. 65W
	BIOS	AMI UEFI 64Mbit
	Internal memory	2 x SO-DIMM DDR4-2400MHz(The maximum support is 32GB)
	store	1 x mSATA Hard disk card slot
		1 x M.2(B Key, Type 2280)SSD card slot, SATA signal
	USB	4 x USB3.0, Onboard built-in 1 USB2.0 hardware dongle can be installed
	COM	2 x COM(DB9 male head)，RS232 or RS485 mode can be configured with a toggle switch. RS485 supports automatic flow control,RS232 with ESD protection(Air discharge: ±8KV, contact discharge: ±6KV)
	Ethernet	2 x Intel Gigabit network port
	PoE	8 x Intel Gigabit PoE network ports, each with a maximum power of 15W
	DVI-D	Maximum resolution1920 x 1080
	HDMI	Maximum resolution3840 x 2160
	Extension interface	1 x Full size miniPCIe Card slot，With SIM card slot
	Guard dog	1~255Level programmable setup
Operating system	Codesys	CODESYS V3.5 SP19 Patch 7
Power source	Input voltage	DC12~24V ±10%, Over-current, over-voltage and anti-reverse protection,
	Power consumption	The maximum power consumption is 250W
Mechanical parameter	structure	Fully closed aluminum shell, built-in fan intelligent cooling, support wall-mounted installation or DIN-Rail guide rail installation
	dimension	(L)200mm x (W)154.5mm x (H)74.6mm
	Net weight	2.6Kg
environment	Operating temperature	-20ºC ~ 60ºC (Using SSD)
	Storage temperature	-40ºC ~ 80ºC (Using SSD)
	Relative humidity	5~95% (Non condensing)
	Vibration	Using SSD：5~500Hz, 1.5Grms，Follow IEC60068-2-64
	strike	Use SSD: 20G(duration 11ms, half sine wave), following IEC60068-2-27
	EMC	CE/FCC Class A

Size (unit: mm)

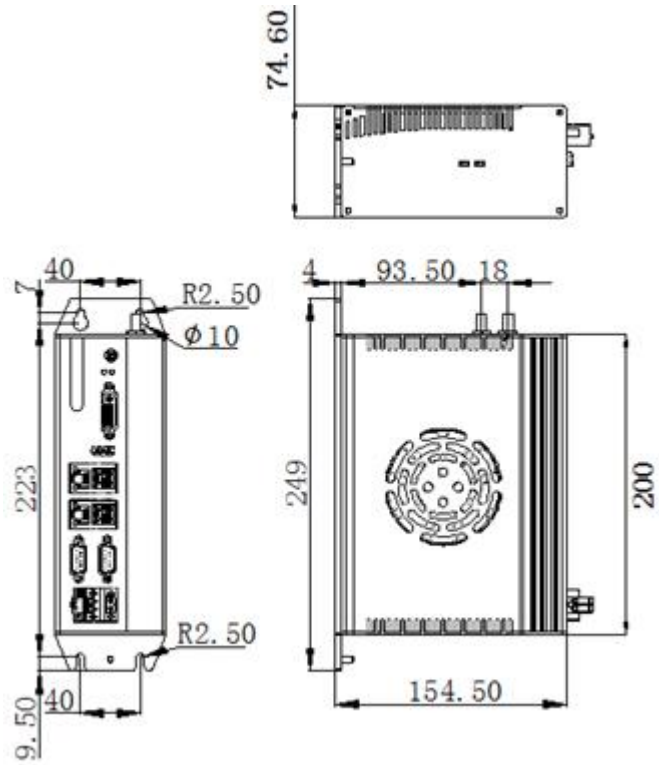

n interface

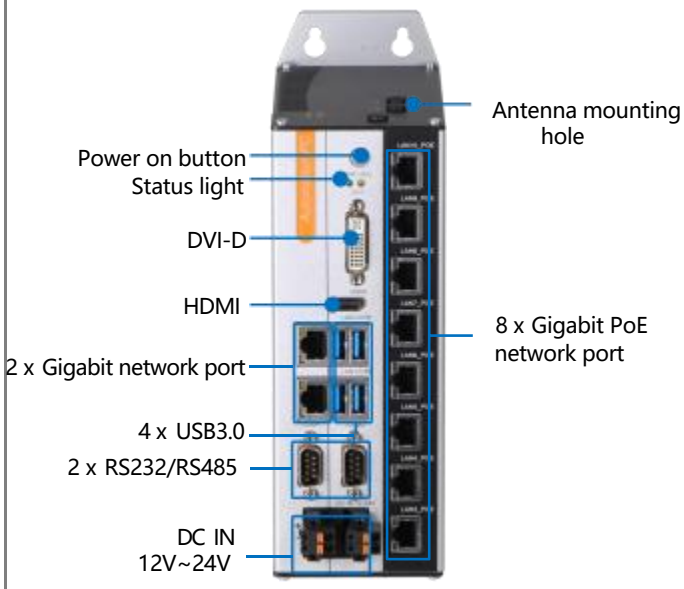

Ordering Information

Part number	Product name	Description
202405010001	T-IPC-3517-D10	CPU: None, Memory: none,mSATA: none, M.2 SATA: none,2xRS232/485(configurable),2xLAN, 4 x USB3.0, DVI-D/HDMI display, 8 x PoE LAN, DC12~24V power input

Optional accessories

Accessories	Description	
CPU	Intel® Pentium	G3900,G4400
	Intel® Core™ Skylake	I3-6100,I3-6100T,I5-6400,I5-6400T,I5-6500,I5-6500T, I7-6700,I7-6700T
	Intel® Core™ Kaby Lake	I3-7100,I5-7400,I5-7500,I7-7700,I7-7700T
	Intel® Core™ Coffee Lake	I3-8100,I5-8400,I5-8500,I7-8700
DDR4 Memory	DDR4-2400MHz , 4GB, 8GB, 16GB	
mSATA Solid state disk	64GB, 128GB, 256GB, 512GB , 1TB	
M.2 SATA Solid state disk	128GB, 256GB, 512GB, 1TB, 2TB	
Wifi Suite	miniPCIE WIFI Kit (Series 7260), cylindrical antenna	
3G/4G Modules	mini PCIE , EC20, EG25, EC25	
Installation method	DIN-Rail	

Address: Unit 601,602, Building 2, Zhongxing Industrial Base, No. 2 East 7th Road, Tianjin Pilot Free Trade Zone (Airport Economic Zone)
Tel: 022-854745517
Email: CDT_Tech@163.com
Website: www.cdt-tech.cn