CHANGDA TONG
SCIENCE & TECHNOLOGY

$\mathcal{T}$ - Screen

Embedded all-in-one touch screen

PRODUCT
MANUAL

Tianjin Changdatong Technology Co., LTD

Founded in 2016, Tianjin Changdatong Technology Co., Ltd. is an innovative technology-based enterprise, integrating R&D, production, sales and service. The main products are programmable controllers, data acquisition modules, switches, industrial touch screens and big data platforms.

At present, the products have reached strategic cooperation with the world's top 500 enterprises and have been applied in many metallurgical enterprises. It is the first domestic enterprise to apply programmable controllers, data acquisition modules, switches, and industrial touch screens in the main process sections of metallurgy.

The company's vision and mission is to "become the backbone of the domestic independent industrial control product field".

Its market positioning is "to be a leading brand of completely independent domestic industrial control products, with the best cost-effective products".

T - Screen

Embedded integrated Touch Screen

T-Screen series touch screen is a high-performance, low-power embedded integrated touch screen based on Linux system. The product covers series of sizes. It features as multi-core architecture, more interfaces, fast startup speed and so on. Most products use cast aluminum panel design, the product is lighter and thinner.

Product advantages:

1. It can communicate with PLC, converter, controller from difference manufacturers
2. Embedded architecture design, more reliable system, less system crash
3. Support multi-level user’ s permission operation and management to avoid mis-operation
4. Support multiple security settings to make equipment more reliable
5. Support multiple languages display and easy to switch between languages.

Size: 7 ", 10", 12.1 ", 15 "

N1-2304

Type		T-SC Industrial Touch Screen			
		T-SC-7807S	T-SC-7810S	T-SC-7812S	T-SC-7815S
Product Characteristics	LCD	7 “TFT	10.1 “TFT	12.1 “TFT	15 “TFT
	Backlight	LED	LED	LED	LED
	Display color	16.77 M	16.77 M	65536 Color	65536 Color
	Resolution	800×480	1024×600	800×600	1024×768
	Brightness	450cd/㎡	350cd/㎡	400cd/㎡	420cd/㎡
	Screen Type	Four wire resistance	Four wire resistance	Four wire resistance	Four wire resistance
	Input Voltage	DC10.8V ~ DC28V	DC10.8V ~ DC28V	DC12V ~ DC28V	DC10.8V ~ DC28V
	Rated Power	4.2W	5W	10.8W	16W
	CUP	800MHz	800MHz	800MHz	800MHz
	Memory	256MB NAND flash memory +256MB DDR3 memory	256MB NAND flash memory +256MB DDR3 memory	128MB NAND flash memory +128MB DDR3 memory	256MB NAND flash memory +256MB DDR3 memory
	Hard clock	Embedded	Embedded	Embedded	Embedded
External Interface	Series Interface	COM0:RS232/RS485/RS422 COM1:RS485/RS422 COM2:RS232	COM0:RS232/RS485/RS422 COM1:RS485/RS422 COM2:RS232	COM0:RS232/RS485/RS422 COM1:RS485/RS422 COM2:RS232	COM0:RS232/RS485/RS422 COM1:RS485/RS422 COM2:RS232
	USB interface	1 USB Host	1 USB Host	1 USB Host	1 USB Host
	Ethernet interface	2×10/100Mself-adaptation	10/100Mself-adaptation	10/100Mself-adaptation	2×10/100Mself-adaptation
Operation Environment	Operation Temp.	0℃~50℃	0℃~50℃	-10℃~55℃	-10℃~55℃
	Operation Humidity	10%-90% (No Condensation)	10%-90% (No Condensation)	10%-90% (No Condensation)	10%-90% (No Condensation)
	Storage Temp.	-20℃~60℃	-20℃~60℃	-20℃~60℃	-20℃~60℃
	Storage Humidity	10%-90% (No Condensation)	10%-90% (No Condensation)	10%-90% (No Condensation)	10%-90% (No Condensation)
Product	Housing material	Engineering plastics	Engineering plastics	Engineering plastics	Engineering plastics
	PCB coating	Have	Have	Have	Have
	Screen Dimension	204mm*150mm*37mm	271 1mm*213.0mm*38mm	350mm*260mm*54mm	398mm*298mm*47mm
	Opening on Panel	192mm*138mm	260mm*202mm	339mm*249mm	383mm*283mm
Certification	IP Level	IP65(Front Panel)	IP65(Front Panel)	IP65(Front Panel)	IP65(Front Panel)

Interface Size

T-SC-7807S

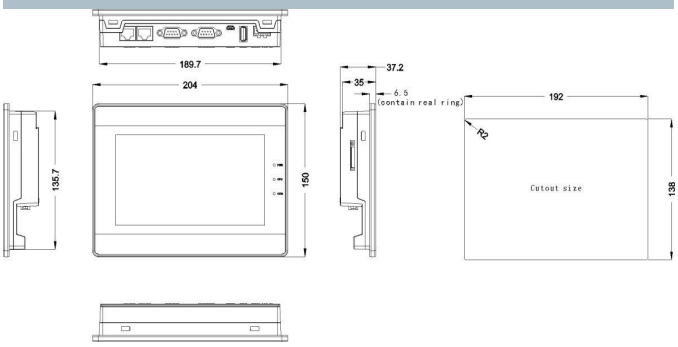

T-SC-7810S

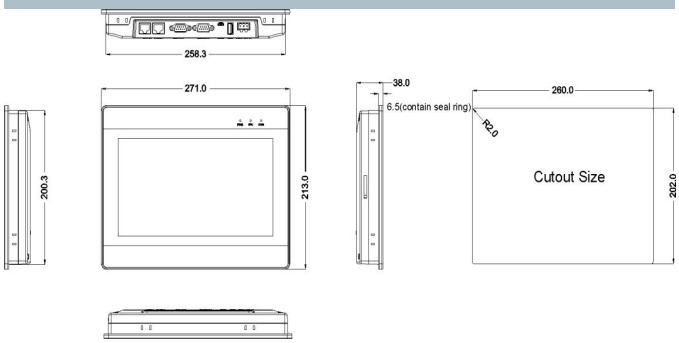

T-SC-7812S

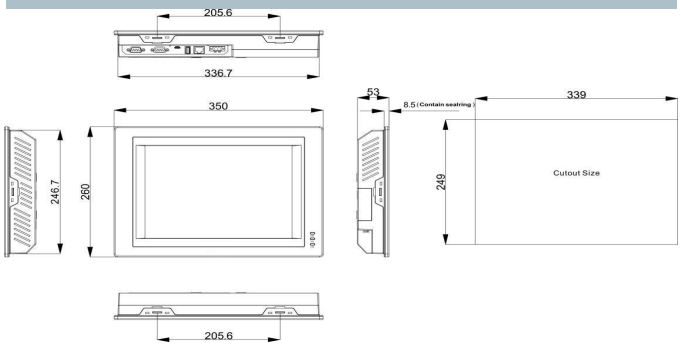

T-SC-7815S

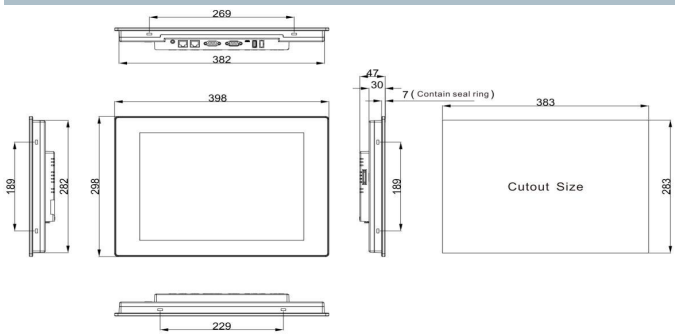

Power Terminal Definition

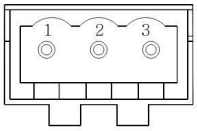

Serial number	Meaning
1	DC24V
2	GND
3	FG

Ethernet0/Ethernet1

10M/100M adaptive Ethernet RJ45 port 。

Connection	With CAT5 UTP cable connected to the Ethernet device.
Port Function	The port can be used for upload/download of HMI configuration, setting of system parameters and online simulations of configurations. It can connect multiple HMIs via the Ethernet to form an HMI network. Furthermore, it can implement communications between HMI and PLC via the Ethernet, as well as communications with a PC via the Ethernet port.

Serial Definition

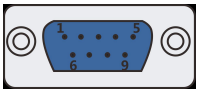

Pin assignment of the 9-pin male, D-SUB, COM0/COM2.**Note:** RS232/485/422 communication functions are supported by COM0.COM2 supports RS232 communication function.

Pin	Signal	PLC （COM0） [RS-422]	PLC（COM0） [RS-485]	PLC （COM0） [RS-232]	PC/PLC （COM2） [RS-232]
1	Rx-（B）	RS422 R-	RS485 B		
2	RxD_PLC			RS232 RxD	
3	TxD_PLC			RS232 TxD	
4	Tx-	RS422 T-			
5	GND	Signal ground			
6	Rx+(A)	RS422 R+	RS485 A		
7	RxD_PC				RS232 RxD
8	TxD_PC				RS232 TxD
9	Tx+	RS422 T+			

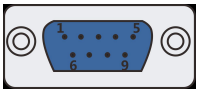

Pin assignment of the 9-pin male, D-SUB, COM1/CANbus. **Note**: : COM1 supports RS485 and RS422 communication function .

Pin	Signal	COM1 [RS-485]	COM1 [RS-422]
1	Rx-(B)	RS485 B	RS422 R-
4	Tx-		RS422 T-
5	GND	Signal ground	
6	Rx+(A)	RS485 A	RS422 R+
9	Tx+		RS422 T+

Installation & Maintenance

1 Installation of Hock

Put the product into the open mounting hole on the control panel of the machine equipment, insert the mounting buckle into the mounting square hole on the HMI housing from the back of the control panel, and then tighten the screw. The recommended torque is 0.5N.m (to achieve waterproof and dustproof effect and avoid shell deformation).

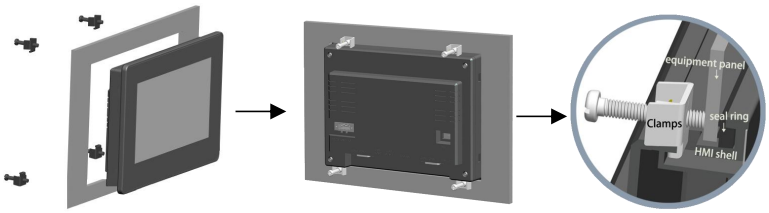

2 Connection of Power

Ensure that all local and national appliance standards are met before connecting to a power source. Power cables Select cables with voltage and current values that meet safety requirements. Loosen the screw of the terminal on the back of the product counterclockwise, insert the power cable, and then tighten the screw of the terminal clockwise. Note: Connect the positive terminal of the power supply to the terminal marked "DC24V", the DC ground to the terminal marked "GND", and the ground to the terminal marked "FG"

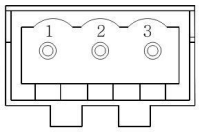

Serial number	Meaning
1	DC24V
2	GND
3	FG

3 Product installation Angle

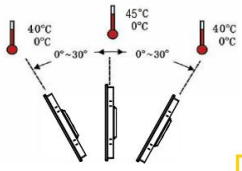

The installation angle is between 0° ~30°

4 Change of Battery

The position of battery: on the PCB of HMI product
Battery Spec: CR2032 3V Lithium battery

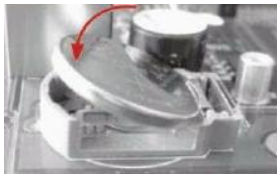

5 Start Up T-Screen

Step 1: Use 24V DC power supply to power T-Screen. After startup, the "Startup" progress bar will appear on the screen, and the project operation interface will be entered;

Step 2: If you need to set the network, press and hold the touch screen until the power is turned on, sound "Di", and click the system setting button to enter the system setting interface;

Step 3: Select network Settings and set the IP address.

6 Screen Calibration

Enter the touch screen calibration procedure: hold down the touch screen until it is powered on, sound "Di", and click the screen calibration setting button to enter the calibration setting interface Touch screen calibration: Use a stylus or finger to click the center point of the cross cursor, and click again when the cursor moves to the next point; Repeat the action until the prompt "New calibration set has been determined" is displayed. Click the "Confirm calibration" button to save and exit the calibration procedure.

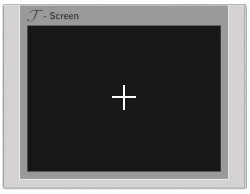

Place your finger gently and accurately in the center of the cross and hold for at least 1 second. Repeat the action as the target moves across the screen.

Address: Unit 601,602, Building 2, Zhongxing Industrial Base, No. 2 East 7th Road, Tianjin Pilot Free Trade Zone (Airport Economic Zone)
Tel: 022-854745517
Email: CDT_Tech@163.com
Website: www.cdt-tech.cn